Terreal UK
Pinewood Chineham Business Park
Crockford Lane
Basingstoke
Hampshire RG24 8AL
Tel: 0845 602 9830 Fax: 0845 602 9873
e-mail: facade@terreal.com
website: www.terrealfacade.com

Agrément Certificate
06/4298
Product Sheet 2

TERREAL CLADDING SYSTEMS

PITERAK SLIM CLADDING SYSTEM

This Agrément Certificate Product Sheet[1] relates to the Piterak Slim Cladding System, comprising terracotta tiles mechanically fastened to vertical aluminium rail, to provide a labyrinth-jointed, back-ventilated and drained rainscreen cladding system for use on concrete or masonry external walls of new and existing buildings.

(1) Hereinafter referred to as 'Certificate'.

CERTIFICATION INCLUDES:

- factors relating to compliance with Building Regulations where applicable
- factors relating to additional non-regulatory information where applicable
- independently verified technical specification
- assessment criteria and technical investigations
- design considerations
- installation guidance
- regular surveillance of production
- formal three-yearly review.

KEY FACTORS ASSESSED

Strength and stability — the system can be designed to resist wind loads normally encountered in the UK (see section 6).

Behaviour in relation to fire — the tile and rail components of the system are non-combustible (see section 7).

Air and water penetration — the vertical and horizontal joints between the tiles will minimise water entering the cavity. Any water collecting in the cavity will be removed by drainage and ventilation (see section 8).

Durability — when used in normal exposure conditions, the tiles can have a life in excess of 35 years and the support components a service life at least commensurate with that of the tiles (see section 10).

The BBA has awarded this Certificate to the company named above for the system described herein. This system has been assessed by the BBA as being fit for its intended use provided it is installed, used and maintained as set out in this Certificate.

On behalf of the British Board of Agrément

Date of Second issue: 19 December 2016

Originally certificated on 2 December 2013

Brian Chamberlain
Head of Technical Excellence

Claire Curtis-Thomas
Chief Executive

The BBA is a UKAS accredited certification body — Number 113. The schedule of the current scope of accreditation for product certification is available in pdf format via the UKAS link on the BBA website at www.bbacerts.co.uk

Readers are advised to check the validity and latest issue number of this Agrément Certificate by either referring to the BBA website or contacting the BBA direct.

British Board of Agrément
Bucknalls Lane
Watford
Herts WD25 9BA
tel: 01923 665300
fax: 01923 665301
clientservices@bba.star.co.uk
www.bbacerts.co.uk

Regulations

In the opinion of the BBA, the Piterak Slim Cladding System, if installed, used and maintained in accordance with this Certificate, can satisfy or contribute to satisfying the relevant requirements of the following Building Regulations (the presence of a UK map indicates that the subject is related to the Building Regulations in the region or regions of the UK depicted):

The Building Regulations 2010 (England and Wales) (as amended)

Requirement:	A1	Loading
Comment:		The system is acceptable. Seen sections 4.3 and 6 of this Certificate.
Requirement:	B4(1)	External fire spread
Comment:		The system can contribute to meeting this Requirement. See section 7 of this Certificate.
Requirement:	C2(b)(c)	Resistance to moisture
Comment:		The system is not watertight but will resist the passage of rainwater to the supporting structure. See section 8 of this Certificate.
Regulation:	7	Materials and workmanship
Comment:		The system is acceptable. See section 10 and the *Installation* part of this Certificate.

The Building (Scotland) Regulations 2004 (as amended)

Regulation:	8(1)(2)	Durability, workmanship and fitness of materials
Comment:		The system can contribute to a construction satisfying this Regulation. See sections 9 and 10 and the *Installation* part of this Certificate.
Regulation:	9	Building standards applicable to construction
Standard:	1.1(a)(b)	Structure
Comment:		The system is acceptable, with reference to clause 1.1.1[(1)(2)]. See sections 4.3 and 6 of this Certificate.
Standard:	2.4	Cavities
Comment:		The system, when used in conjunction with fire-resistant materials, can meet this Standard, with reference to clauses 2.4.1[(1)(2)], 2.4.2[(1)(2)] and 2.4.9[(1)(2)]. See section 7.4 of this Certificate.
Standard:	2.6	Spread to neighbouring buildings
Standard:	2.7	Spread on external walls
Comment:		The system can contribute to satisfying these Standards, with reference to clauses 2.6.4[(1)(2)] and 2.7.1[(1)(2)] respectively. See section 7 of this Certificate.
Standard:	3.10	Precipitation
Comment:		The system is not watertight but will resist the passage of rainwater to the supporting structure, with reference to clauses 3.10.1[(1)(2)] to 3.10.3[(1)(2)]. See section 8 of this Certificate.
Standard:	7.1	Statement of sustainability
Comment:		The system can contribute to meeting the relevant requirements of Regulation 9, Standards 1 to 6 and therefore will contribute to a construction meeting a bronze level of sustainability as defined in this Standard.
Regulation:	12	Building standards applicable to conversions
Comment:		All comments given for the system under Regulation 9, Standards 1 to 6 also apply to this Regulation, with reference to clause 0.12.1[(1)(2)] and Schedule 6[(1)(2)].

(1) Technical Handbook (Domestic).
(2) Technical Handbook (Non-Domestic).

The Building Regulations (Northern Ireland) 2012 (as amended)

Regulation:	23	Fitness of materials and workmanship
Comment:		The system is acceptable. See section 10 and the *Installation* part of this Certificate.
Regulation:	28	Resistance to moisture and weather
Comment:		The system is not watertight but will resist the passage of rainwater to the supporting structure. See section 8 of this Certificate.
Regulation:	30	Stability
Comment:		The system is acceptable. See sections 4.3 and 6 of this Certificate.
Regulation:	36(a)	External fire spread
Comment:		The system can contribute to meeting this Regulation. See section 7 of this Certificate.

Construction (Design and Management) Regulations 2015

Construction (Design and Management) Regulations (Northern Ireland) 2016

Information in this Certificate may assist the client, designer (including Principal Designer) and contractor (including Principal Contractor) to address their obligations under these Regulations.

See section: 3 *Delivery and site handling* (3.1 and 3.6) of this Certificate.

Additional Information

NHBC Standards 2016

NHBC accepts the use of the Piterak Slim Cladding System, provided it is installed, used and maintained in accordance with this Certificate, in relation to *NHBC Standards*, Part 6 *Superstructure (excluding roofs)*, Chapter 6.9 *Curtain walling and cladding*.

Technical Specification

1 Description

1.1 The Piterak Slim Cladding System comprises double wall terracotta tiles attached with at least four metal support clips to vertical aluminium support rails fixed to aluminium brackets, which are in turn fixed to the substrate wall. The tiles are installed with back ventilation and drainage and are hung horizontally.

Tiles

1.2 The tiles (see Figure 1) are manufactured in a hollow, double-wall design and are available as standard flat and corner tiles (left and right cut edges at 45°) with horizontal overlapping joints. They are available in a range of colours with a smooth, sanded, glazed, ridged or grooved finish and have a surface density of 48.5 kg·m^{-2}.

Figure 1 Tiles and dimensions (mm)

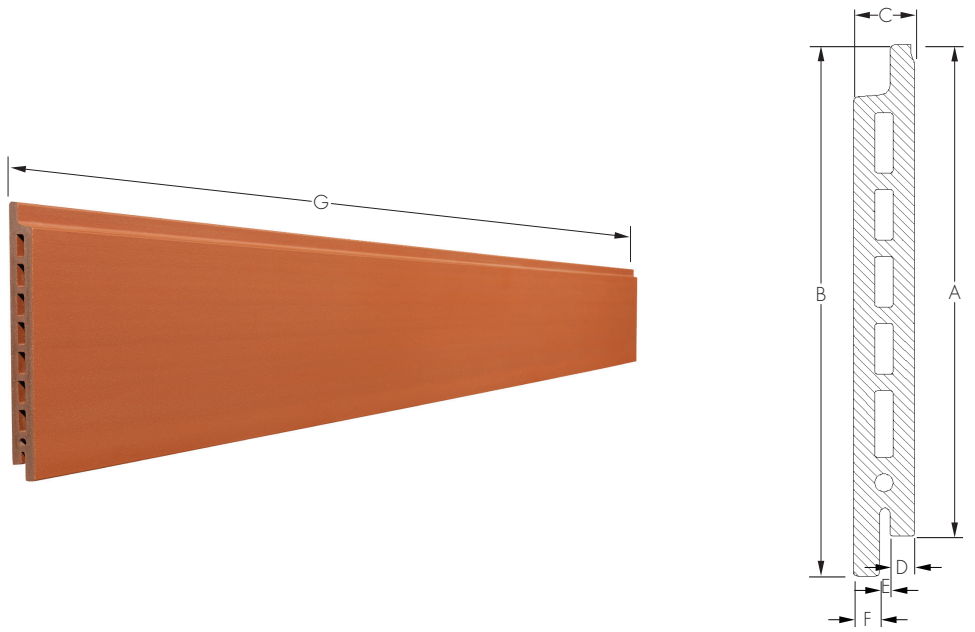

Dimension A	194, 244, 294, 394, 494, 594
Dimension B	214, 264, 314, 414, 514, 614
Dimension C	30
Dimension D	12
Dimension E	5
Dimension F	13
Dimension G	300–1600

Vertical support rails

1.3 The vertical support rails (see Figure 2) are manufactured from extruded aluminium alloy EN AW 6060 (to BS EN 573-3 : 2013) T6 (to BS EN 755-2 : 2016) with optional graduated finish. They are available in three profiles:

- 3 mm thick Omega profile, 3000 mm long
- 2.5 mm thick Y-profile, 3000 mm long
- 3 mm thick corner rails, 3000 mm long.

Figure 2 Vertical support rails and clips (dimensions in mm)

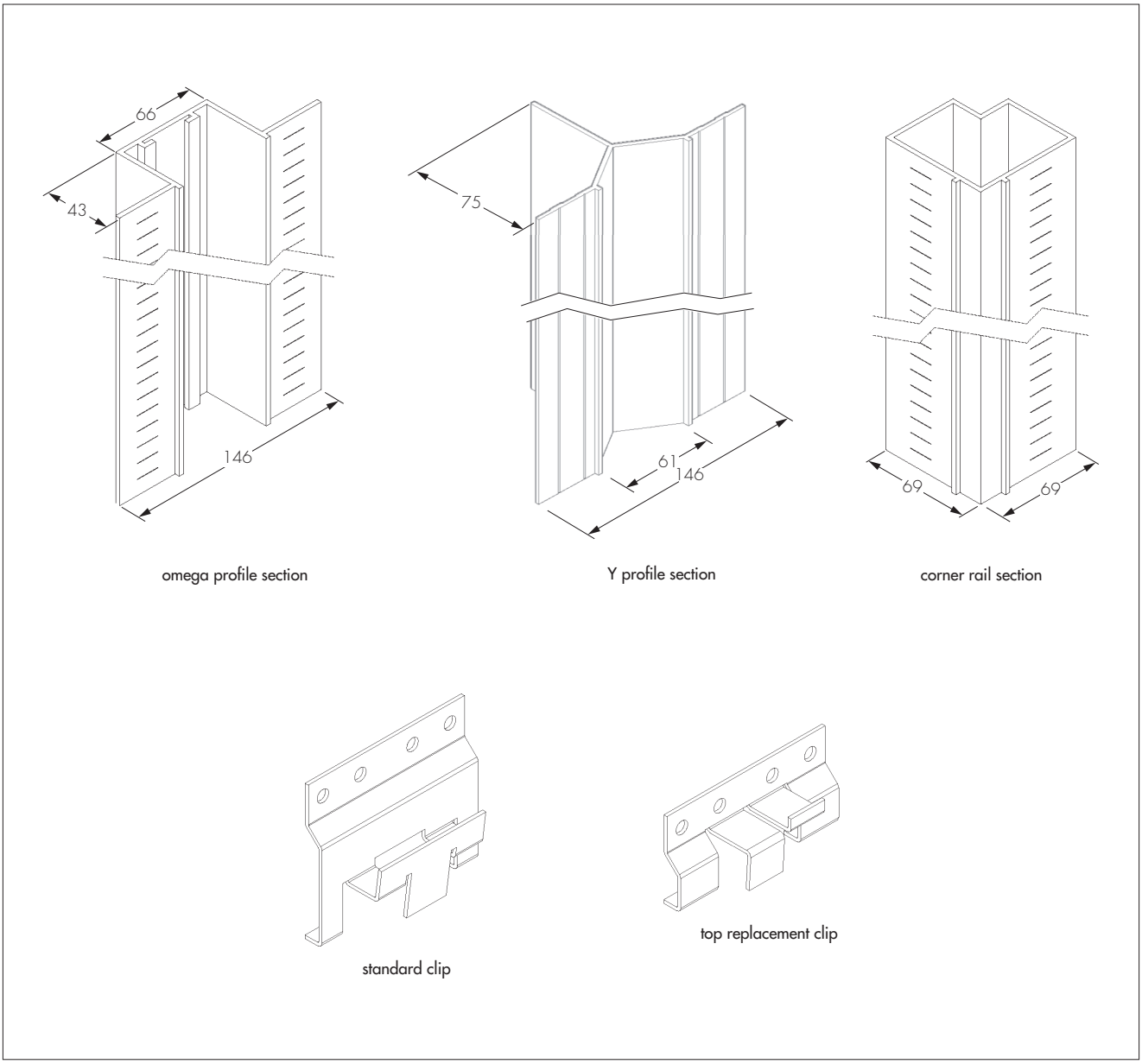

1.4 Hanging tile support clips (see Figure 2) are manufactured from A2 stainless steel (1.4301 to BS EN 10088-1 : 2014). The standard tile clip is 65 mm high by 75 mm wide, with a protruding tab to fit into the groove on the underside of the tile and a downward tongue to hook onto the top of the adjacent tile. A top replacement clip is 36.5 mm by 75 mm wide.

Fixings

1.5 Stainless steel screws type A2 (1.4301 to BS EN 10088-1 : 2014), 5.5 mm in diameter by 25 mm in length, are used for fixing both the clips to the support rails (two screws per clip) and the support rails to aluminium wall brackets (two screws per wall bracket).

Other components

1.6 Support brackets, manufactured from aluminium EN AW 6060 (to BS EN 573-3 : 2013) T5 (to BS EN 755-2 : 2016), 3 mm thick and 120 mm long with a supporting area of 80 mm by 40 mm, are used with the system.

1.7 Ancillary items used with the system, but outside the scope of this Certificate, are:

- substrate anchors — galvanized steel or stainless steel A2 or A4 (1.4301 and 1.4867 respectively to BS EN 10088-1 : 2014) anchors (the subject of ETA approval) used to fix the bracket to the substrate wall (specification dependent on the strength of the substrate)
- finishing profiles — aluminium and galvanized steel trim profiles used to finish various details
- insulation — rigid or semi-rigid non-combustible insulation boards
- breather membrane
- cavity barriers.

2 Manufacture

2.1 The tiles are manufactured by extrusion of a single blend of clay paste which is then dried, cut and fired using an automated kiln.

2.2 As part of the assessment and ongoing surveillance of product quality, the BBA has:

- agreed with the manufacturer the quality control procedures and product testing to be undertaken
- assessed and agreed the quality control operated over batches of incoming materials
- monitored the production process and verified that it is in accordance with the documented process
- evaluated the process for management of nonconformities
- checked that equipment has been properly tested and calibrated
- undertaken to carry out the above measures on a regular basis through a surveillance process, to verify that the specifications and quality control operated by the manufacturer are being maintained.

2.3 The system is manufactured in Portugal and is marketed and distributed in the UK by the Certificate holder.

3 Delivery and site handling

3.1 Tiles are delivered to site polythene wrapped and banded on wooden pallets. Pallets should be stored on level ground and not stacked.

3.2 Each pallet of tiles bears a label showing product details such as type, size, nominal thickness, quantity and date of manufacture. Each tile is additionally marked with an identification code including manufacturing references and colour.

3.3 Tiles should be handled with care to avoid damage or breakage. Care is required when handling long lengths of rail, particularly at height.

3.4 Rails are delivered to site banded onto a wooden pallet with any ancillary items in separate cardboard boxes.

3.5 Packs of rails should be stacked horizontally on sufficient bearers to prevent distortion, to a maximum height of 1 m. Other components should be stored in a safe weatherproof store.

3.6 Care should be exercised when handling rails to avoid injury from sharp edges. Protective clothing should be worn and all health and safety rules should be observed.

Assessment and Technical Investigations

The following is a summary of the assessment and technical investigations carried out on the Piterak Slim Cladding System.

Design Considerations

4 General

4.1 The Piterak Slim Cladding System is satisfactory for use on masonry or concrete walls of new and existing buildings to provide a labyrinth-jointed, back-ventilated protective façade.

4.2 It is important for designers, planners, contractors and/or installers to ensure that the installation of the system is in accordance with the Certificate holder's instructions and the information given in this Certificate. All design aspects should be checked by a suitably qualified and experienced individual in accordance with the requirements of the relevant Building Regulations and Standards.

4.3 The substrate wall to which the cladding is to be fixed must be structurally sound and meet the requirements of the relevant Building Regulations and Standards with regard to watertightness, heat and sound transmission.

4.4 Ventilation and drainage must be provided behind the cladding. As the rainscreen cladding tiles are labyrinth-jointed, the clear cavity between the back of the tile and the substrate wall (or insulation if installed on the substrate wall) must be at least 38 mm wide to ensure that a minimum ventilation area of 1000 mm^2 per metre run of cladding is achieved. Joint gaps between the tiles are between 10 and 20 mm wide. All ventilation openings around the periphery of the system should be suitably protected with mesh to prevent the ingress of birds, vermin and insects.

4.5 To allow for thermal expansion, a gap of 10–15 mm should be provided between the ends of adjacent aluminium support rails.

4.6 As the rainscreen is labyrinth-jointed, any insulation installed behind the cladding must be suitably fixed to the supporting wall and protected to resist the forces of wind suction. Insulation should be of a rigid or semi-rigid type (eg boards) and, where its performance could be diminished by moisture, a breather membrane should be provided over its outer face.

5 Practicability of installation

The system must only be installed by installers who have been trained and approved by the Certificate holder.

6 Strength and stability

Wind loading

6.1 Design wind loads should be calculated in accordance with BS EN 1991-1-4 : 2005 and its UK National Annex. Due consideration should be given to the higher pressure coefficients applicable to corners of the building as recommended in the Standard.

6.2 The supporting substrate wall must have sufficient strength to resist on its own the loads imparted directly by the cladding system and wind actions normally experienced in the UK, as well as any racking loads. No contribution from the cladding system may be assumed in this respect.

6.3 The designer should ensure that:

- the design of the sub-frame is in accordance with the relevant codes and Standards, and such as to limit mid-span deflections to span/200 and cantilever deflections to span/150
- the tiles are fixed to the wall brackets using the specified fixing mechanisms (see sections 1.3 to 1.6 of this Certificate)
- fixing of the support brackets to the supporting wall has adequate tensile pull-out and corrosion resistance (not covered by this Certificate). Site-specific tests should be conducted on the substrate of the building to determine the minimum pull-out resistance to failure of the fixings.

6.4 Results of tests carried out to confirm the wind resistance of the system for various subframe support arrangements are given in Table 1.

Table 1 Design wind load resistance (dimensions in mm)

Rail	Tile size (mm x mm)	Clip spacing (mm)	Rail spacing (mm)	Wind load resistance[1][2][3] (Pa)
Omega	214 x 1520	1380	1530	1693
	219–264 x 1520	1380	1530	1941
	269–314 x 1520	1380	1530	2064
	319–414 x 1520	1380	1530	1281
	419–614 x 1600	650[4]	800[4]	1437[4]
Y	214–614 x 1600	650	800	1437

(1) Derived by applying a safety factor of 4 on ultimate values.
(2) Four fixing points.
(3) Wall brackets vertical spacing: 600 mm.
(4) Limited to the value obtained from testing the worst-case scenario (Y rail).

Impact resistance

6.5 When tested for hard and soft body impacts, the system, used in conjunction with the Omega rails and with clips at 1380 mm centres horizontally and 400 mm vertically, achieved adequate resistance for use in impact Categories II, III and IV as defined in Table 4 of ETAG 034 : 2012, Part 1 (an extract from which is shown in Table 2 below).

6.6 When tested for hard and soft body impacts, the system, used in conjunction with Y rails spaced 1600 mm horizontally and with clips at 600 mm centres vertically, achieved adequate resistance for use in impact Category IV as defined in Table 4 of ETAG 034 : 2012, Part 1 (an extract from which is shown in Table 2 below).

Table 2 Definition of use categories (from ETAG 034 : 2012, Part 1)

Use category	Description
I	A zone readily accessible at ground level to the public and vulnerable to hard body impacts but not subjected to abnormally rough use.
II	A zone liable to impacts from thrown or kicked objects, but in public locations where the height of the kit will limit the size of the impact; or at lower levels where access to the building is primarily to those with some incentive to exercise care.
III	A zone not likely to be damaged by normal impacts caused by people or by thrown or kicked objects.
IV	A zone out of reach from ground level

7 Behaviour in relation to fire

7.1 The tiles and aluminium support rails have an A1 reaction to fire classification in accordance with BS EN 13501-1 : 2007 and are non-combustible as defined in the national Building Regulations.

7.2 The tile is not subject to any height restriction when used on a substrate and with components that meet the non-combustibility requirement of materials in the relevant national Building Regulations. When used in conjunction with combustible materials, the whole wall construction should meet the requirements of BRE Report BR 135 : 2013 *Fire performance of external thermal insulation for walls of multi storey buildings*.

7.3 The resistance to fire of the installed system depends on the performance of the wall on which the system has been installed. This can only be determined by tests from a suitably-accredited laboratory, and therefore is not covered by this Certificate.

7.4 To limit the risk of fire spread between floors in buildings subject to national Building Regulations, fire barriers must be incorporated in the cavity behind the tiles as required under these Regulations, but should not block essential ventilation pathways. Guidance on fire barriers can be found in BRE Report BR 135 : 2013.

8 Air and water penetration

8.1 The tiles have a mean water absorption between 6% and 9% to BS EN ISO 10545-3 : 1997.

8.2 The cladding is not airtight or watertight, but intentionally labyrinth-jointed, back-ventilated and drained. Any water passing through the tile joints and collecting in the cavity owing to rain or condensation will be removed by drainage and ventilation.

8.3 The supporting wall must meet the requirements of the relevant Standards and Building Regulations with respect to watertightness and airtightness.

8.4 The vertical joints between tiles should, as far as possible, coincide with the centre line of vertical rails to minimise precipitation into the cavity resulting from wind-driven rain. As the labyrinth joints ensure pressure equalisation, the air cushion within the cavity will reduce the amount of water passing through the joints.

9 Maintenance

9.1 The tiles do not require regular cleaning, but, should cleaning become necessary, it may be carried out using a neutral PH detergent. For the removal of efflorescence, graffiti or persistent stains, the Certificate holder's advice should be sought.

9.2 Checks should be carried out periodically to ensure that ventilation and drainage pathways remain clear; blockages should be cleared promptly.

9.3 Damaged tiles should be replaced as soon as practicable and in accordance with the Certificate holder's instructions (see section 13.7).

10 Durability

10.1 Freeze-thaw tests on clay products indicate that there will be no significant change in the physical properties of the tiles on ageing.

10.2 When used in normal exposure conditions in the UK, the tiles will have a life in excess of 35 years, provided regular checks and a maintenance regime are carried out (see section 9.2).

10.3 The aluminium rails will have a service life at least commensurate with the tiles they are supporting.

10.4 After natural weathering, a slight change in the colour of the tiles may occur. However, this is not likely to be progressive.

11 Reuse and recyclability

The aluminium rail and bracket components can be recycled.

Installation

12 General

12.1 The Piterak Slim Cladding System must be installed in accordance with the Certificate holder's recommendations, the requirements of this Certificate and the specification laid down by the consulting engineer.

12.2 Installers must be trained and approved by the Certificate holder who can provide technical assistance at the design stage and at the start of installation.

12.3 If significant colour variations between batches are likely, it may be necessary to mix tiles from different pallets so as to obtain a uniform shade over the whole façade.

12.4 Owing to manufacturing tolerances, some unevenness on the façade surface may occur, but this is not normally excessive or obtrusive. However, to minimise this 'sailing' effect, installation quality should be carefully monitored.

12.5 Tiles can be cut on a wet table saw using a blade for ceramic material.

12.6 Typical installation details are given in Figure 3 and 4.

Figure 3 Typical installation details (Omega rail)

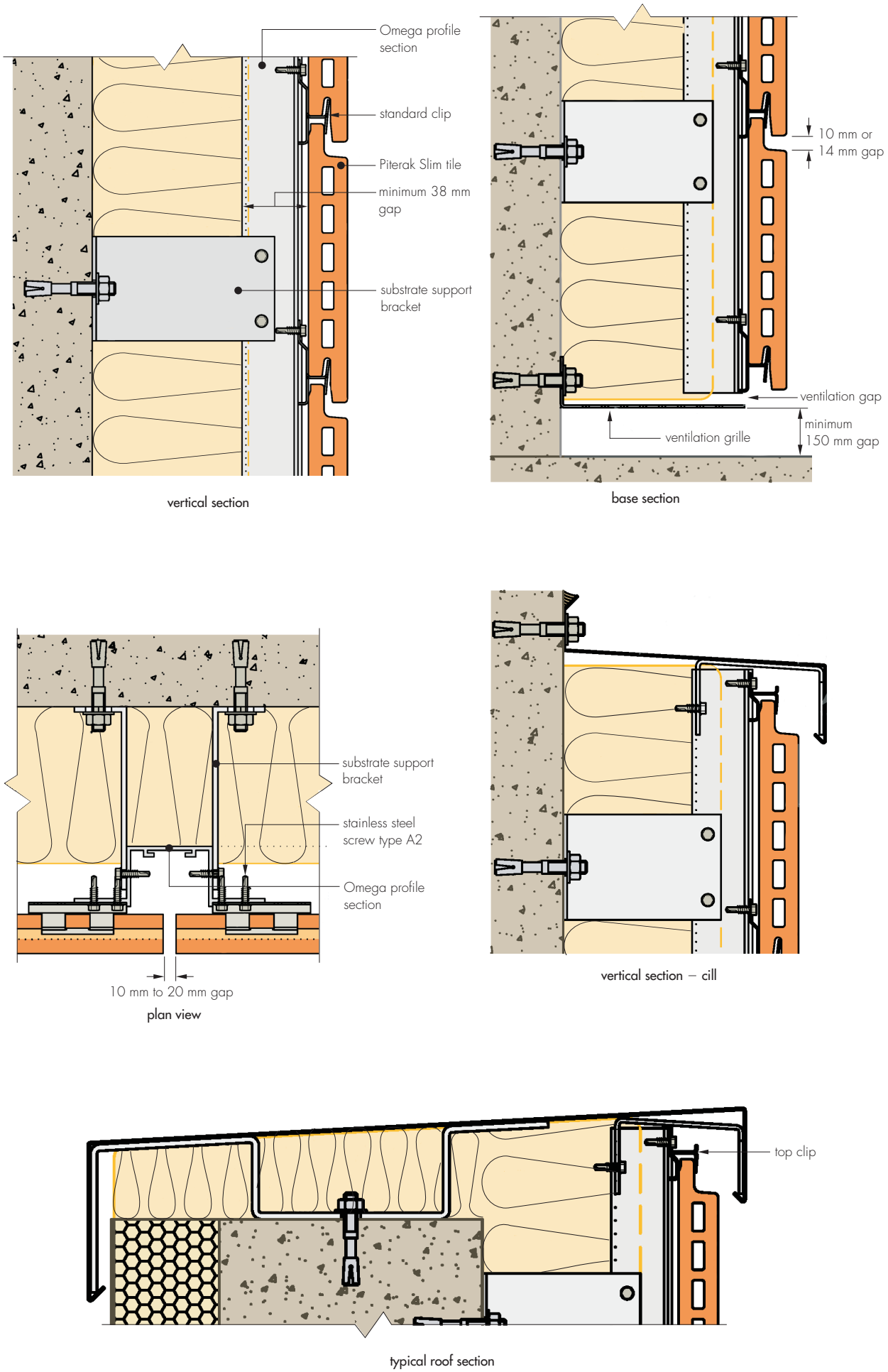

Figure 4 Typical installation details (Y-rail)

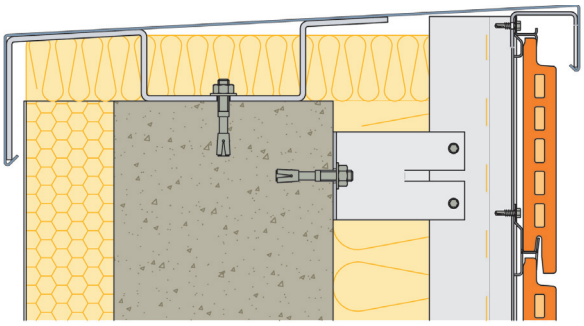

typical roof section

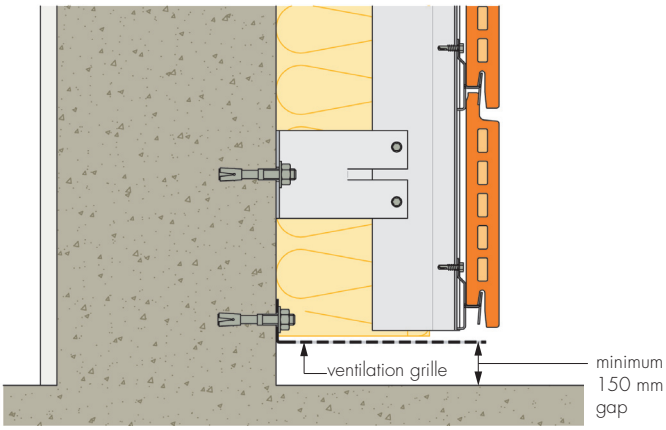

base section

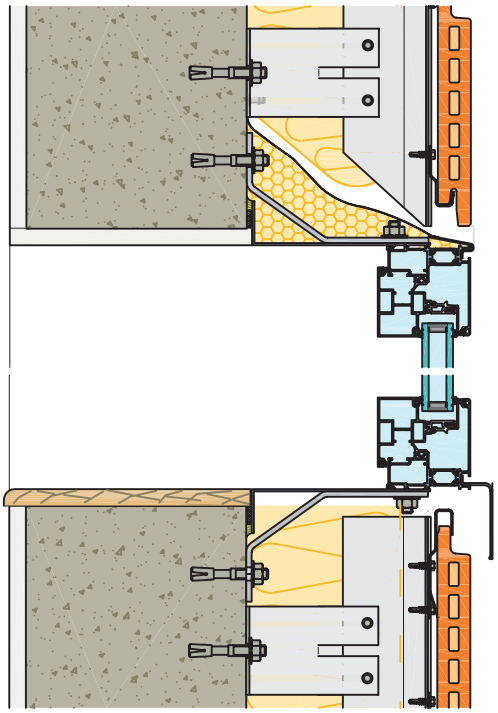

window lintel and sill

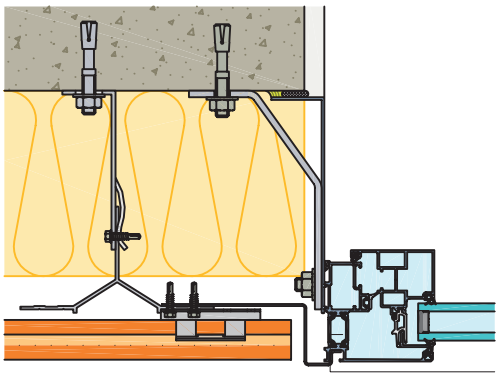

jamb

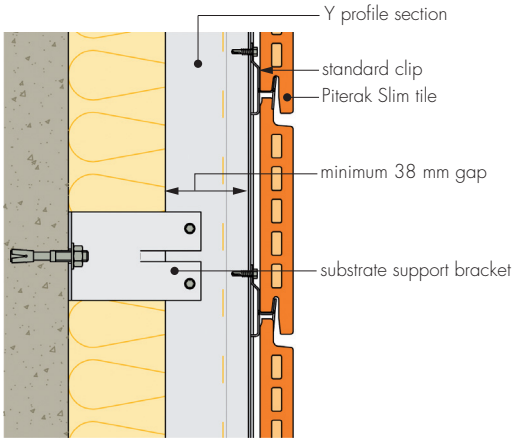

vertical section

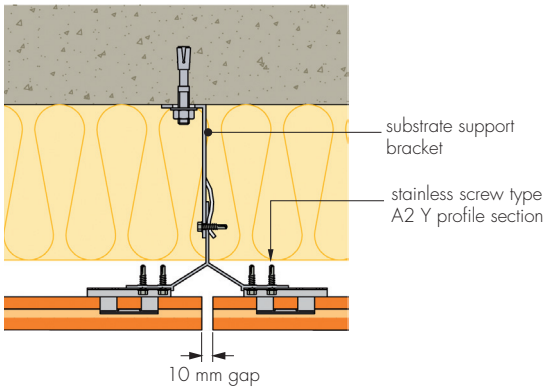

plan view

13 Procedure

13.1 Using the appropriate grid layout, vertical rails are fixed to the supporting brackets using stainless steel screws, identifying positions where cut-outs are required. A gauge may be used to facilitate accurate and consistent positioning of the rails to ensure that the maximum admissible deviation of 2 mm is not exceeded.

13.2 At expansion joints on the structural wall, vertical support rails are positioned on both sides of the joint.

13.3 The tile clips are fastened to the vertical support rails with two self-drilling screws, using the vertical graduations on the rails as a guide. Working from the base upwards, the tiles are securely locked onto the clips. A vertical joint of 10–20 mm and a horizontal joint of 10–14 mm must be provided between the tile sides to allow for thermal expansion of the materials.

13.4 An overlapping flashing of suitable durable material is required. At the base it is necessary to use an L-shaped metal section to help protect the cladding system and facilitate drainage.

Corner and opening details

13.5 Corner rails are fixed to the corners of the walls using L brackets on both sides of the rail. Left or right Piterak Slim tiles are inserted onto the tile clips as described in section 13.3, ensuring that a 3–5 mm joint is left at the angle between the two tiles. Metal profile trims are used to finish the corner detail.

13.6 Around details such as openings, sills and lintels either a metal frame or metal flashing is used to finish the installation and ensure proper drainage.

Repair

13.7 Replacement of damaged tiles can be carried out independently of adjacent tiles, by removing the broken tile and standard clip at the bottom and positioning a replacement clip and tile, beginning at the top.

Technical Investigations

14 Tests and investigations

14.1 Test reports from independent test laboratories were assessed to determine wind and impact resistance.

14.2 An assessment was made of the system's durability, behaviour in relation to fire and practicability of installation.

14.3 The manufacturing process was evaluated, including the methods adopted for quality control, and details were obtained of the quality and composition of the materials used.

Bibliography

BS EN 573-3 : 2013 *Aluminium and aluminium alloys — Chemical composition and form of wrought products — Chemical composition and form of products*

BS EN 755-2 : 2016 *Aluminium and aluminium alloys — Extruded rod/bar, tube and profiles — Mechanical properties*

BS EN 1991-1-4 : 2005 + A1 : 2010 *Eurocode 1 : Actions on structures — General actions — Wind actions*
NA to BS EN 1991-1-4 : 2005 + A1 : 2010 UK National Annex to *Eurocode 1 : Actions on structures — General actions — Wind actions*

BS EN 10088-1 : 2014 *Stainless steels — List of stainless steels*

BS EN 13501-1 : 2007 + A1 : 2009 *Fire classification of construction products and building elements — Classification using test data from reaction to fire tests*

BS EN ISO 10545-3 : 1997 *Ceramic tiles — Determination of water absorption, apparent porosity, apparent relative density and bulk density*

ETAG 034: 2012, Part 1 *Guideline for European Technical Approval of Kits for External Wall Claddings*

15 Conditions

15.1 This Certificate:

- relates only to the product/system that is named and described on the front page
- is issued only to the company, firm, organisation or person named on the front page — no other company, firm, organisation or person may hold or claim that this Certificate has been issued to them
- is valid only within the UK
- has to be read, considered and used as a whole document — it may be misleading and will be incomplete to be selective
- is copyright of the BBA
- is subject to English Law.

15.2 Publications, documents, specifications, legislation, regulations, standards and the like referenced in this Certificate are those that were current and/or deemed relevant by the BBA at the date of issue or reissue of this Certificate.

15.3 This Certificate will remain valid for an unlimited period provided that the product/system and its manufacture and/or fabrication, including all related and relevant parts and processes thereof:

- are maintained at or above the levels which have been assessed and found to be satisfactory by the BBA
- continue to be checked as and when deemed appropriate by the BBA under arrangements that it will determine
- are reviewed by the BBA as and when it considers appropriate.

15.4 The BBA has used due skill, care and diligence in preparing this Certificate, but no warranty is provided.

15.5 In issuing this Certificate, the BBA is not responsible and is excluded from any liability to any company, firm, organisation or person, for any matters arising directly or indirectly from:

- the presence or absence of any patent, intellectual property or similar rights subsisting in the product/system or any other product/system
- the right of the Certificate holder to manufacture, supply, install, maintain or market the product/system
- actual installations of the product/system, including their nature, design, methods, performance, workmanship and maintenance
- any works and constructions in which the product/system is installed, including their nature, design, methods, performance, workmanship and maintenance
- any loss or damage, including personal injury, howsoever caused by the product/system, including its manufacture, supply, installation, use, maintenance and removal
- any claims by the manufacturer relating to CE marking.

15.6 Any information relating to the manufacture, supply, installation, use, maintenance and removal of this product/system which is contained or referred to in this Certificate is the minimum required to be met when the product/system is manufactured, supplied, installed, used, maintained and removed. It does not purport in any way to restate the requirements of the Health and Safety at Work etc. Act 1974, or of any other statutory, common law or other duty which may exist at the date of issue or reissue of this Certificate; nor is conformity with such information to be taken as satisfying the requirements of the 1974 Act or of any statutory, common law or other duty of care.

British Board of Agrément
Bucknalls Lane
Watford
Herts WD25 9BA

tel: 01923 665300
fax: 01923 665301
clientservices@bba.star.co.uk
www.bbacerts.co.uk